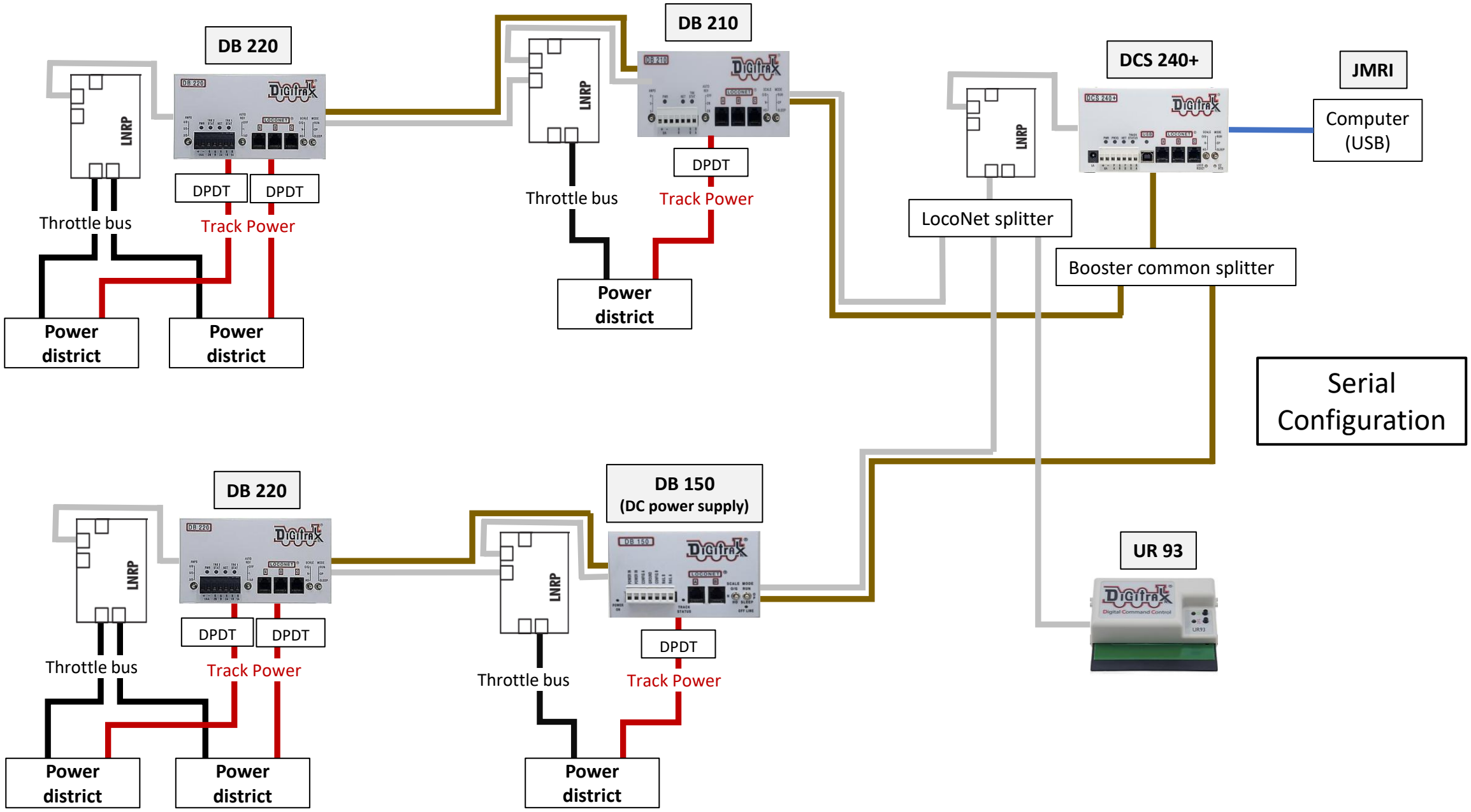
DB 220
LNRP
DPDT
DPDT
Throttle bus
Track Power
Power district
Power district
DB 210
LNRP
DPDT
Throttle bus
Track Power
Power district
DCS 240+
LNRP
JMRI
Computer (USB)
LocoNet splitter
Booster common splitter
Serial Configuration
DB 220
LNRP
DPDT
DPDT
Throttle bus
Track Power
Power district
Power district
DB 150
(DC power supply)
LNRP
DPDT
Throttle bus
Track Power
Power district
UR 93

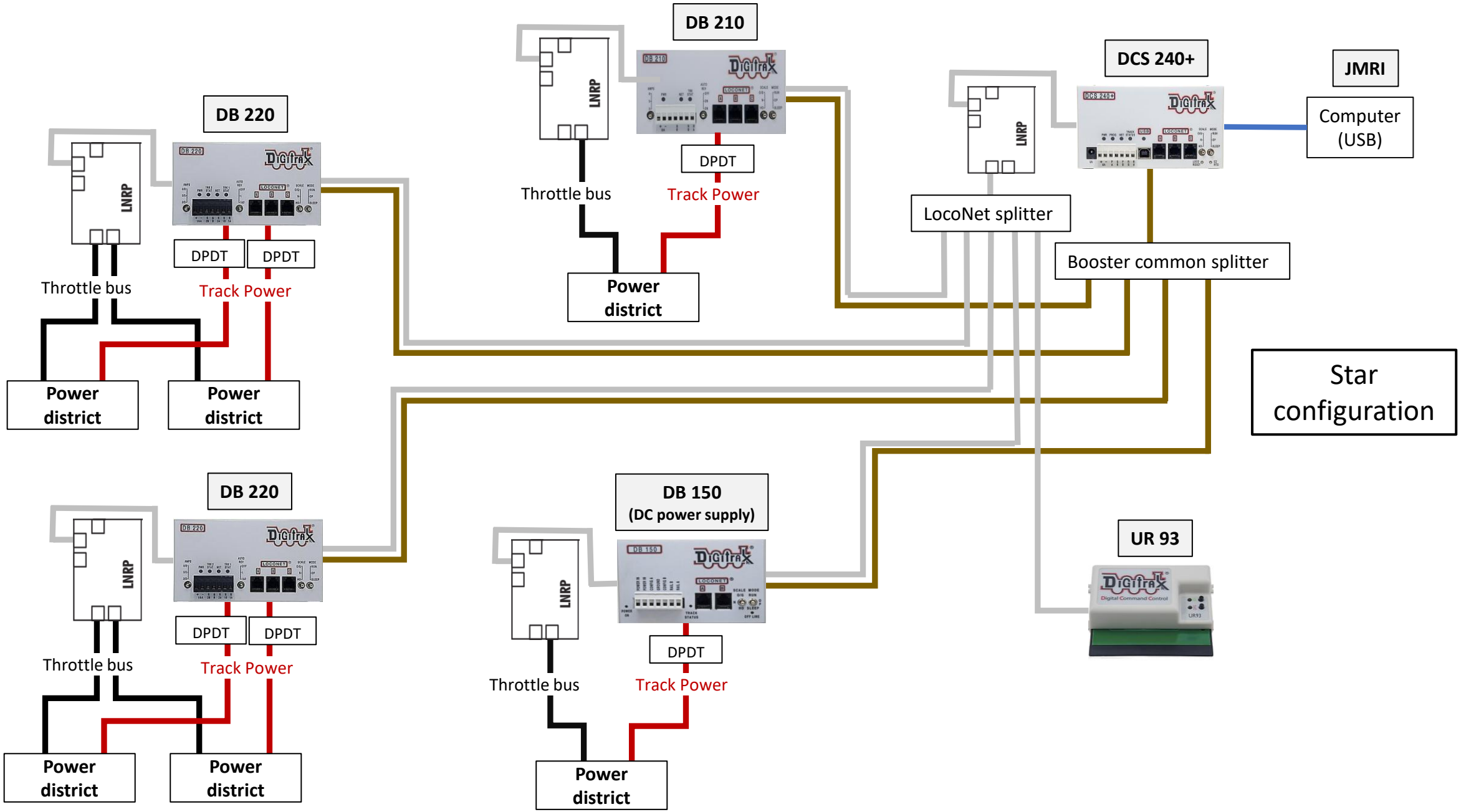
DB 210
LNRP
DPDT
Track Power
Throttle bus
Power district
DCS 240+
JMRI
Computer (USB)
LNRP
LocoNet splitter
Booster common splitter
DB 220
LNRP
DPDT
DPDT
Throttle bus
Track Power
Power district
Power district
Star configuration
DB 220
LNRP
DPDT
DPDT
Throttle bus
Track Power
Power district
Power district
DB 150
(DC power supply)
LNRP
DPDT
Throttle bus
Track Power
Power district
UR 93